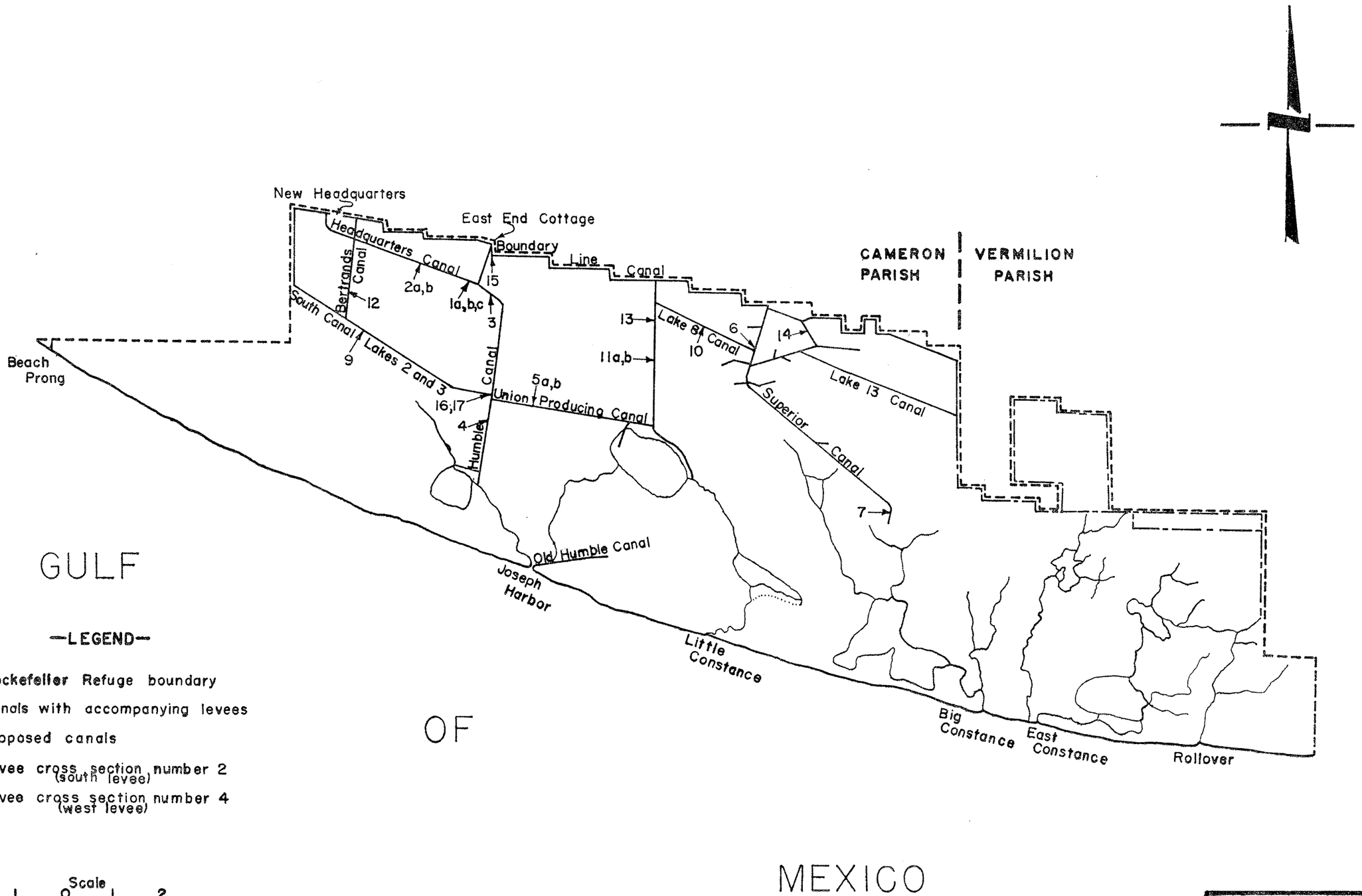

Rockefeller Refuge Levee Study

Location Map
for
Levee Cross Sections

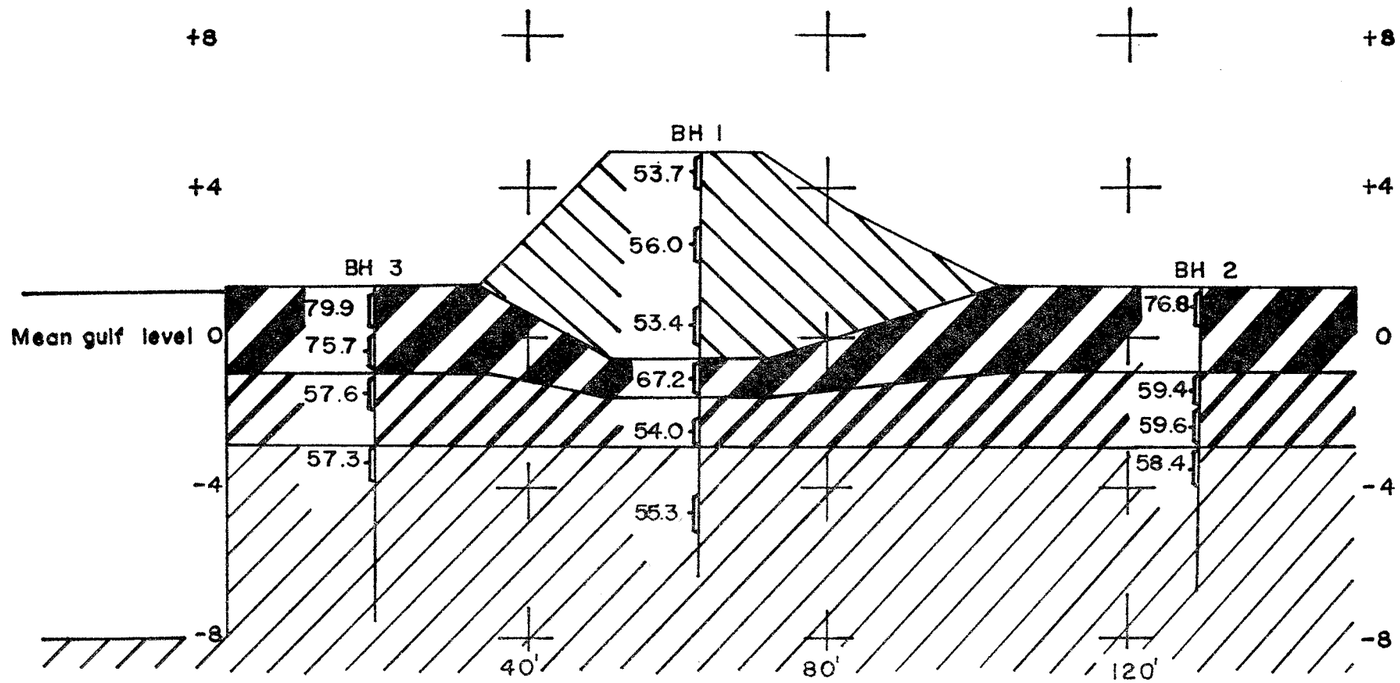

Levee Cross Section No.12 (non-ridge) Bertrand's Canal Lake 3 (east levee)

Horizontal scale 1 inch=20 feet Vertical scale 1 inch=4 feet

Datum plane is mean gulf level

Numbers adjacent to bore holes are moisture contents in percent wet weight

Date of section June 21, 1955

Organic matter (surface layer)

Oxidized humic gray clay (ridge)

Levee

Gray black clay

Shiny gray clay

Water (canal)

Rockefeller Refuge Levee Study

Levee Cross Section No. 12

For location see PLATE II

841-B

PLATE III

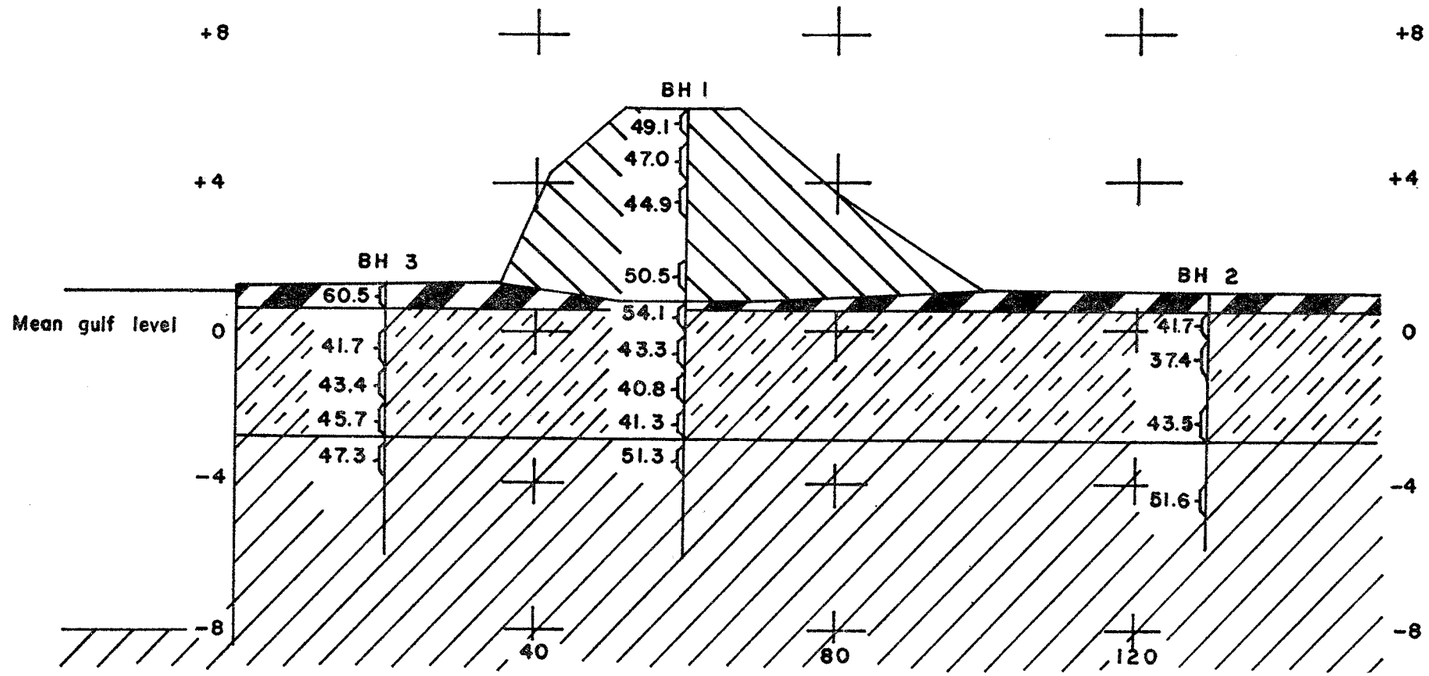

Levee Cross Section No. 9 (ridge) South Canal Lakes 2 and 3 (south levee)

Horizontal scale 1 inch=20 feet Vertical scale 1 inch= 4 feet

Datum plane is mean gulf level

Numbers adjacent to boreholes are moisture contents in percent wet weight

Date of section June 16, 1955

Organic matter (Surface layer

Oxidized humic gray clay (ridge)

Levee

Gray black clay

Shiny gray clay

Water (canal)

For location see PLATE II

Rockerfeller Refuge Levee Study

Levee Cross Section No. 9

PLATE IV

841-B

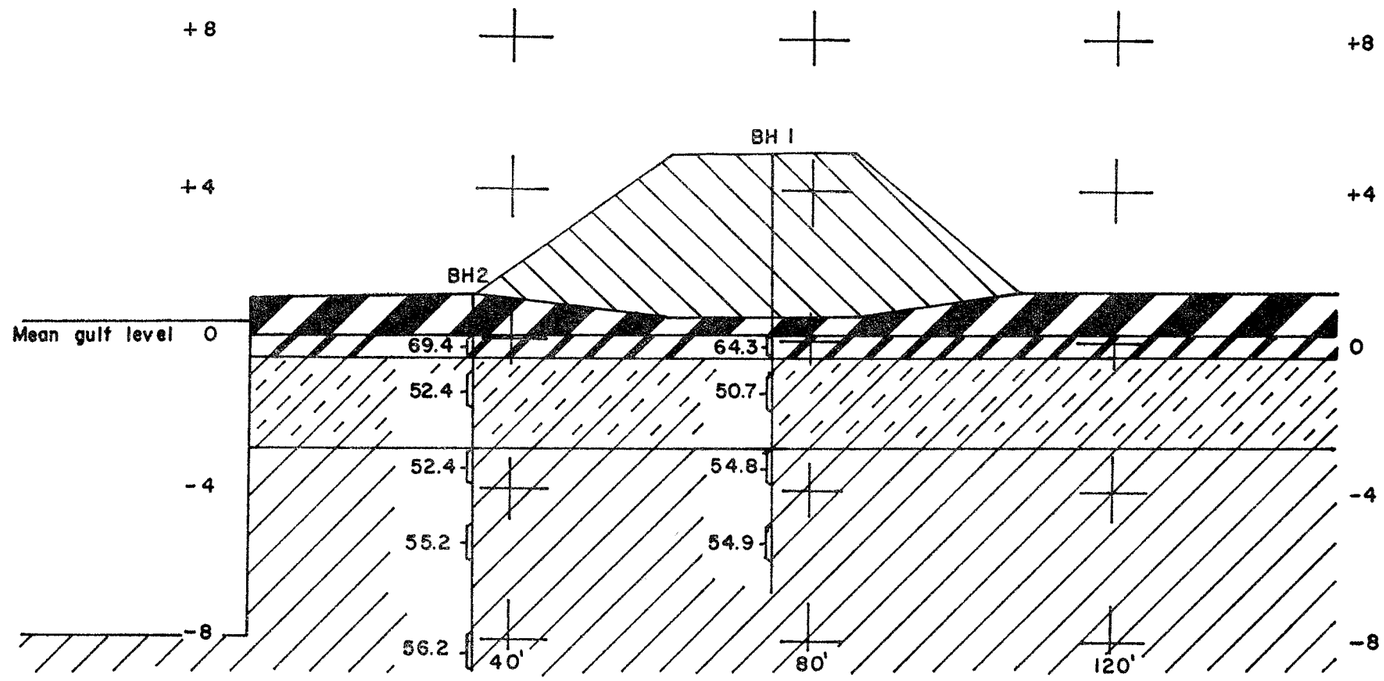

Levee Cross Section No.1a Headquarters Canal (south levee)

Horizontal scale 1 inch=20 feet Vertical scale 1 inch=4 feet
Datum plane is mean gulf level
Numbers adjacent to boreholes are moisture contents in percent wet weight
Date of section September 13, 1954

Organic matter (Surface layer)
Oxidized humic gray clay (Ridge)
Levee
Gray black clay
Shiny gray clay
Water (canal)

For location see PLATE II

Rockefeller Refuge Levee Study

Levee Cross Section No.1a

PLATE V

841-B

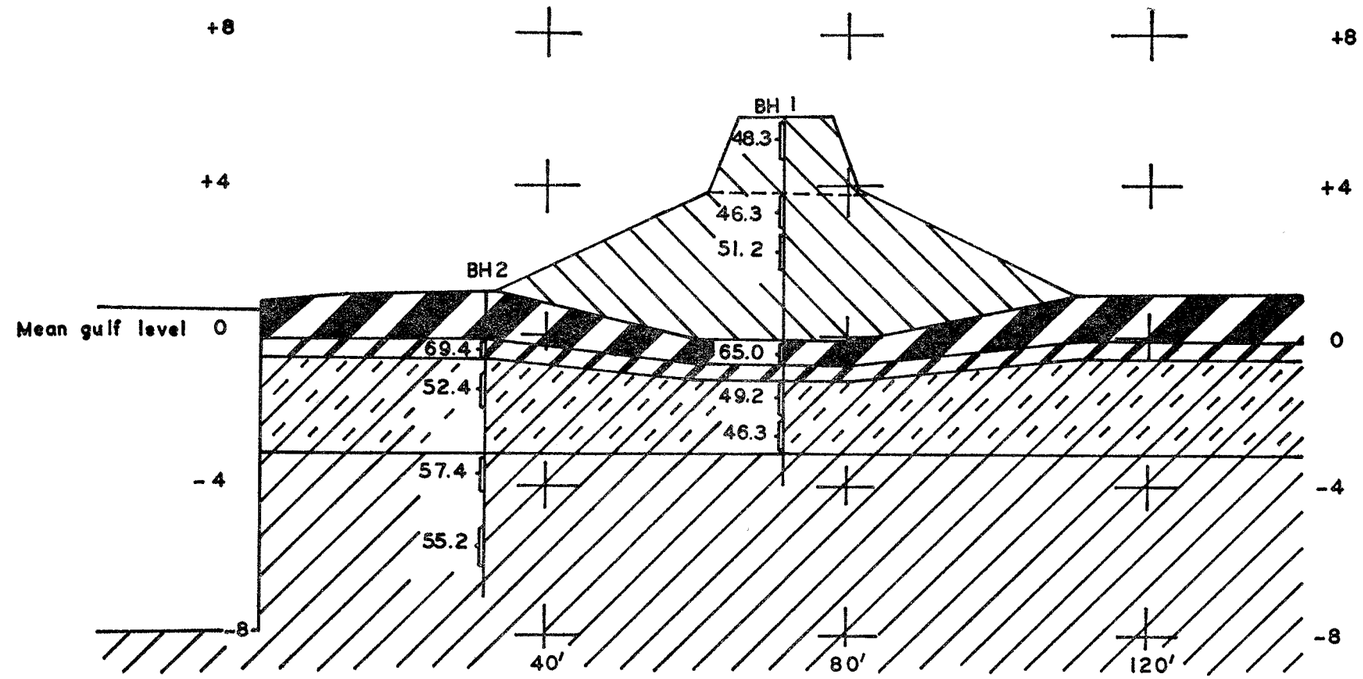

Levee Cross Section No.1c Headquarters Canal (south levee) resectioned

Horizontal scale 1 inch=20 feet Vertical scale 1 inch=4 feet
Datum plane is mean gulf level
Numbers adjacent to boreholes are moisture contents in percent wet weight
Date of section August 9, 1955

Organic matter (Surface layer)
Oxidized humic gray clay
Levee
Gray black clay
Shiny gray clay
Water (canal)

Levee reshaped and raised 2 feet; for location see PLATE II.

Rockefeller Refuge Levee Study

Levee Cross Section No. 1c

PLATE VI

841-B

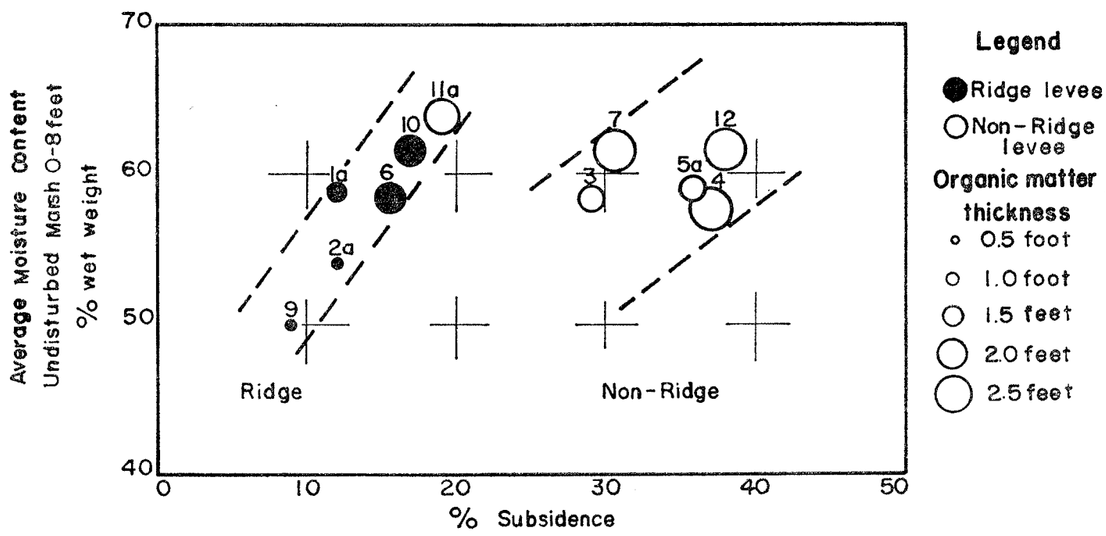

a. Relationship between levee loss, organic matter thickness, and average moisture content of the undisturbed marsh from the surface to a depth of 8 feet.

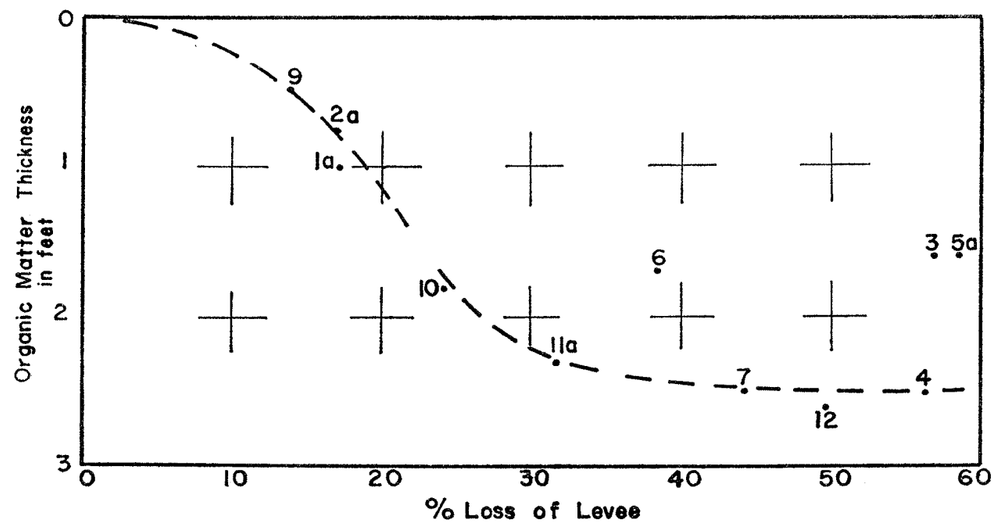

b. Relationship between levee loss and organic matter thickness.

Levee sections identified by numbers. See PLATE II for locations.

Rockefeller Refuge Levee Study

Levee Loss as Related to Organic Matter and Moisture Content

PLATE VII

841-B

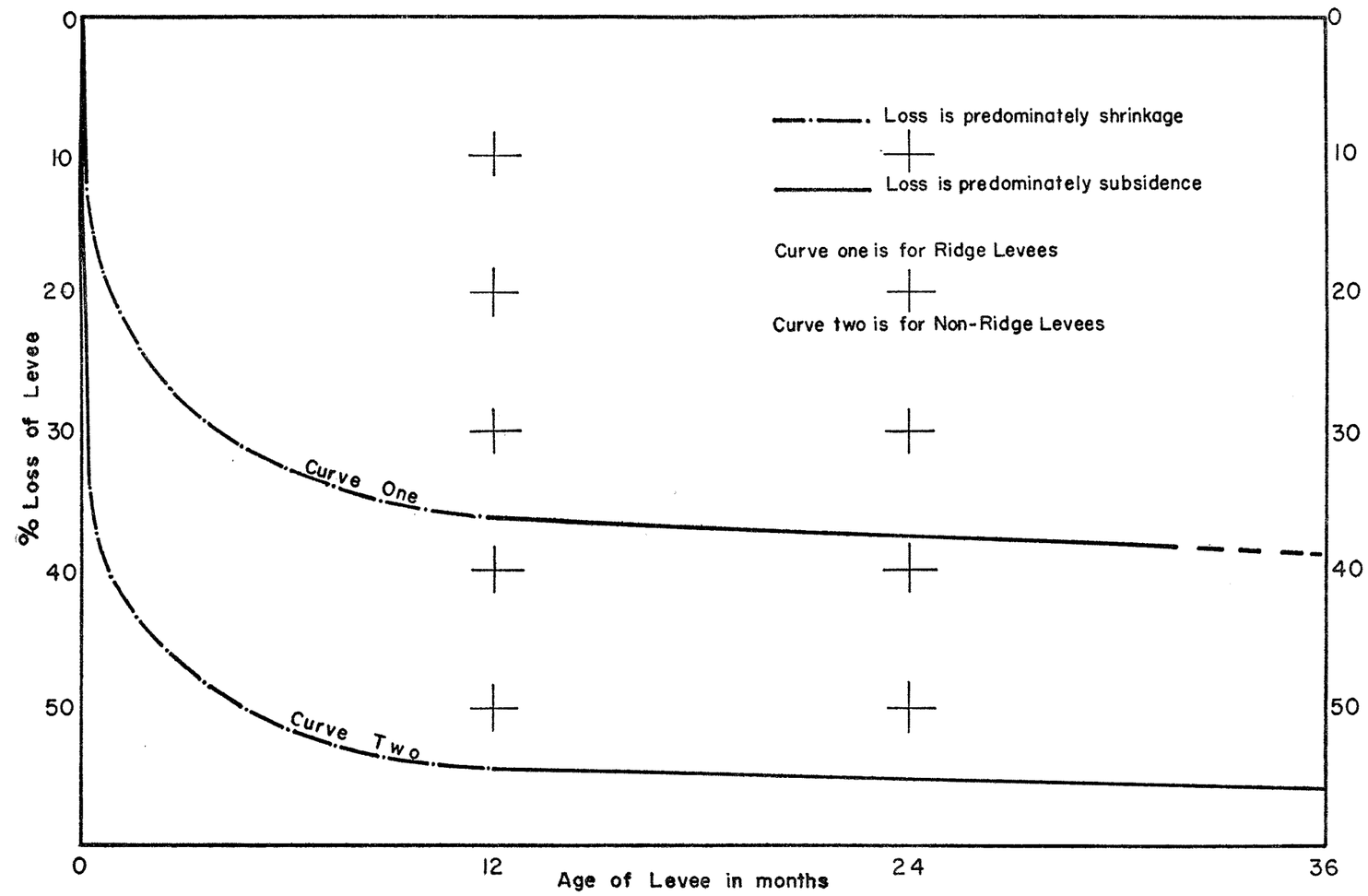

Predicted Loss of Levee Related to Time

Curves constructed from actual levee measurements

Rockefeller Refuge Levee Study

Levee Loss versus Time

PLATE VIII

841-B

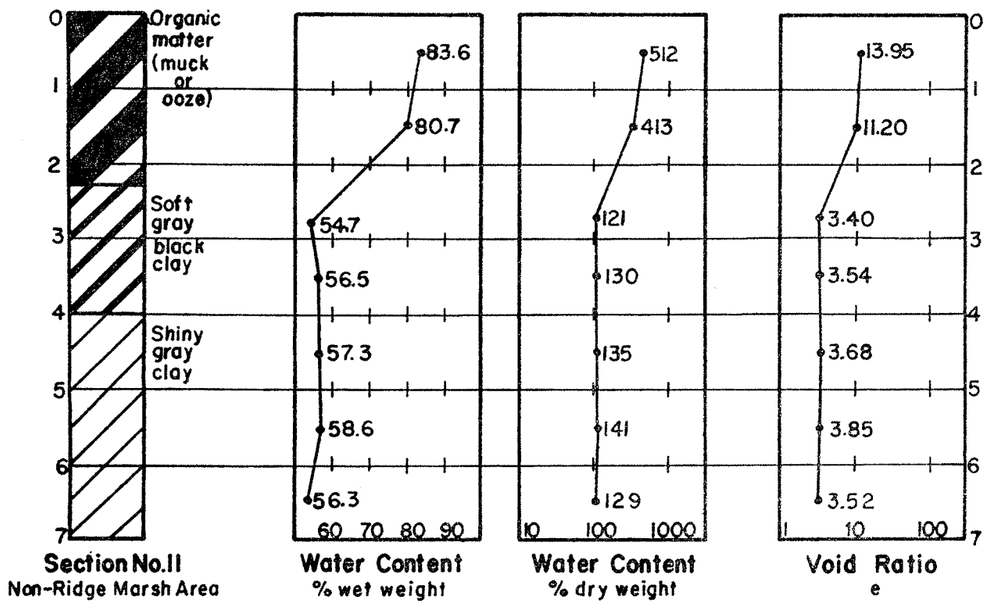

Section No.11
Non-Ridge Marsh Area

Water Content
% wet weight

Water Content
% dry weight

Void Ratio
e

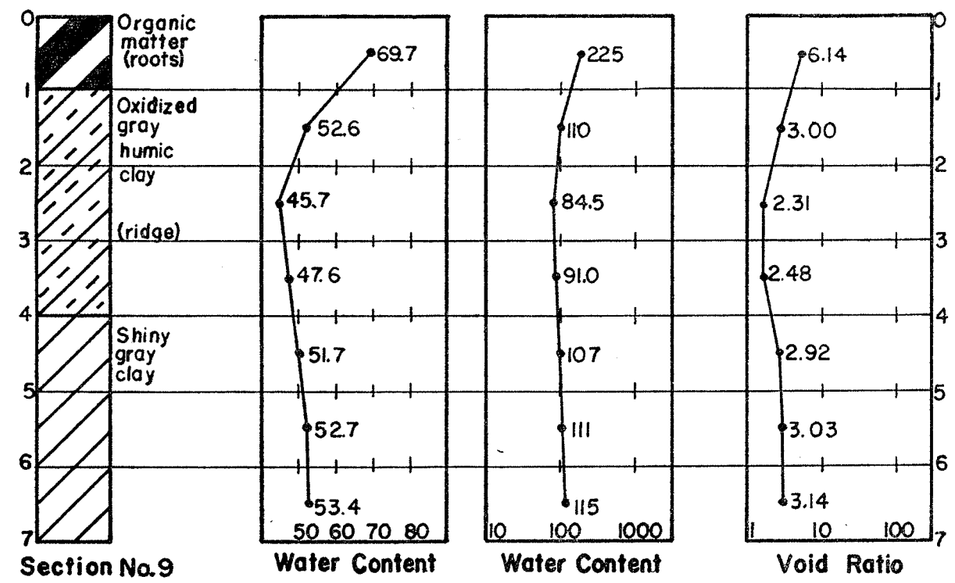

Section No.9
Ridge Marsh Area

Water Content
% wet weight

Water Content
% dry weight

Void Ratio
e

Rockefeller Refuge Levee Study

Test Borings of Marsh with relationships between water content and void ratio.

PLATE IX

841-B

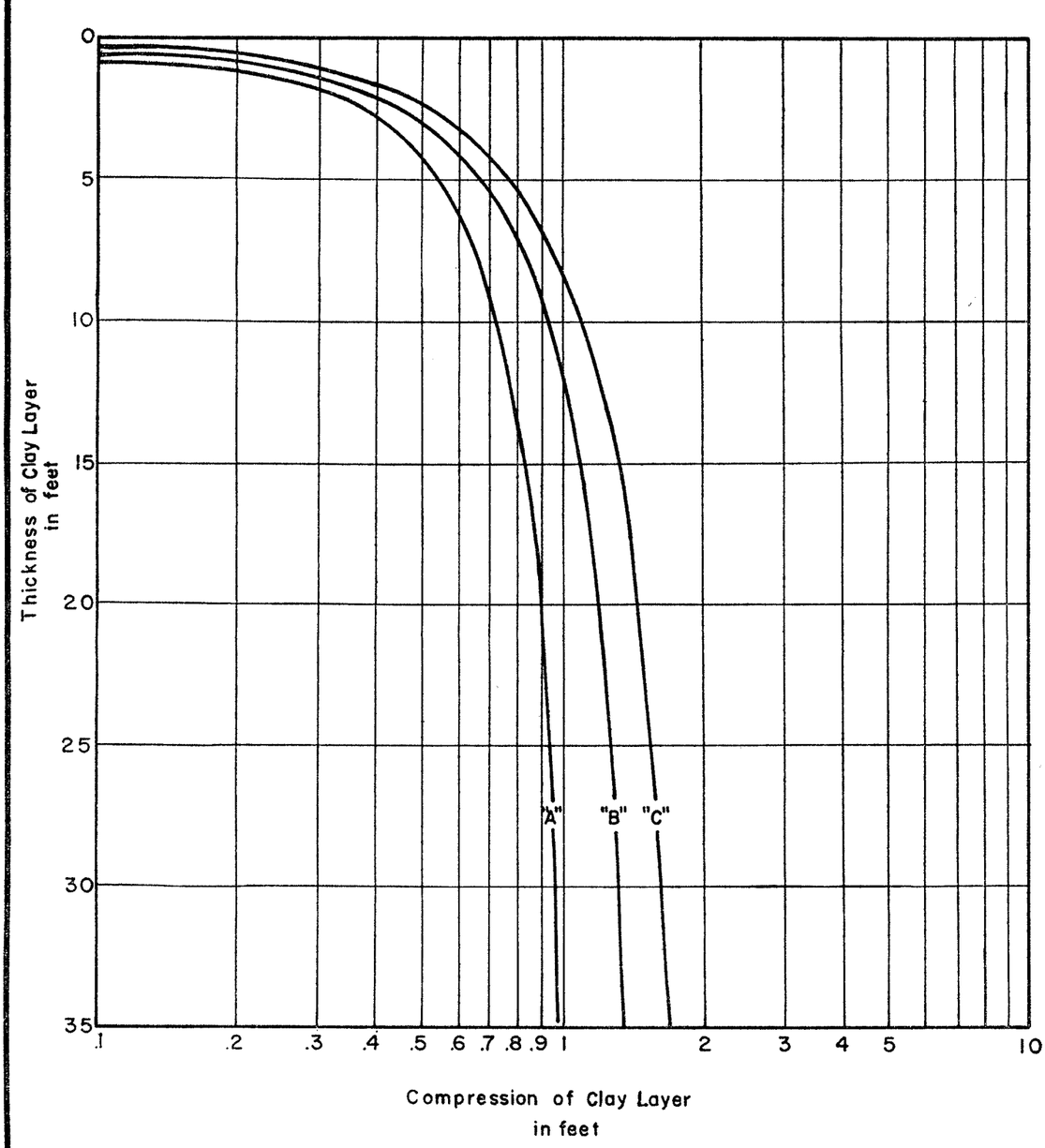

Predicted ultimate compression of clay layer as related to the thickness of the clay layer. Curve "A" is for a levee 4 feet high, Curve "B" is for a levee 6 feet high, Curve "C" is for a levee 8 feet high or one originally 6 feet high and later raised 2 feet. Curves constructed from results obtained by solving a compression formula for confined stratums.

Rockefeller Refuge Levee Study

Clay Compression Graph

PLATE X

841-B

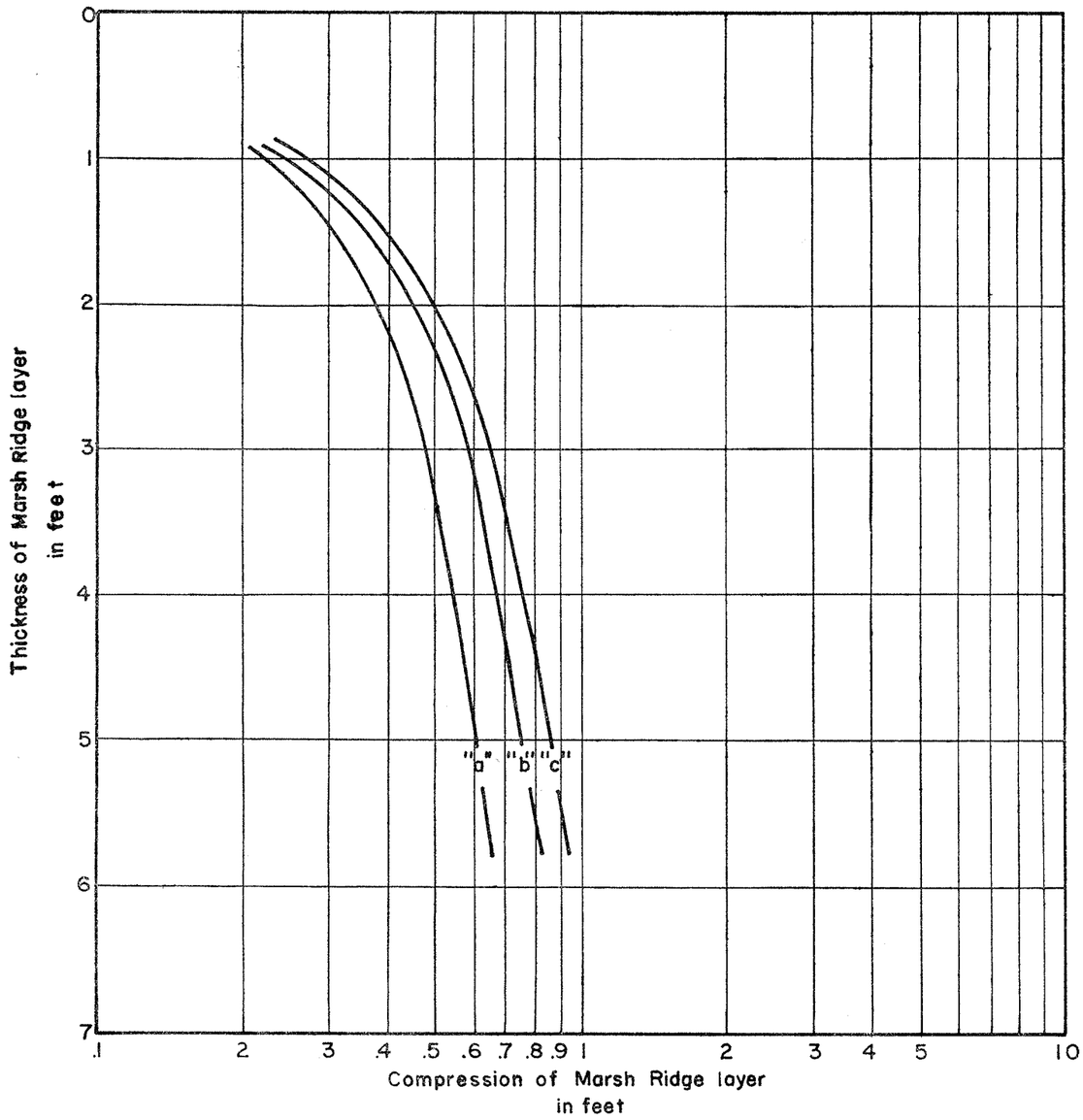

Predicted ultimate compression of marsh ridge layer as related to the original thickness of the marsh ridge layer. Curve "a" is for a levee 4 feet high, curve "b" is for a levee 6 feet high, curve "c" is for a levee 8 feet high or one originally 6 feet high and later raised 2 feet. Curves constructed from the results derived by solving a compression formula for confined stratums.

Rockefeller Refuge Levee Study

Marsh Ridge

Compression Graph

PLATE XI

841-B

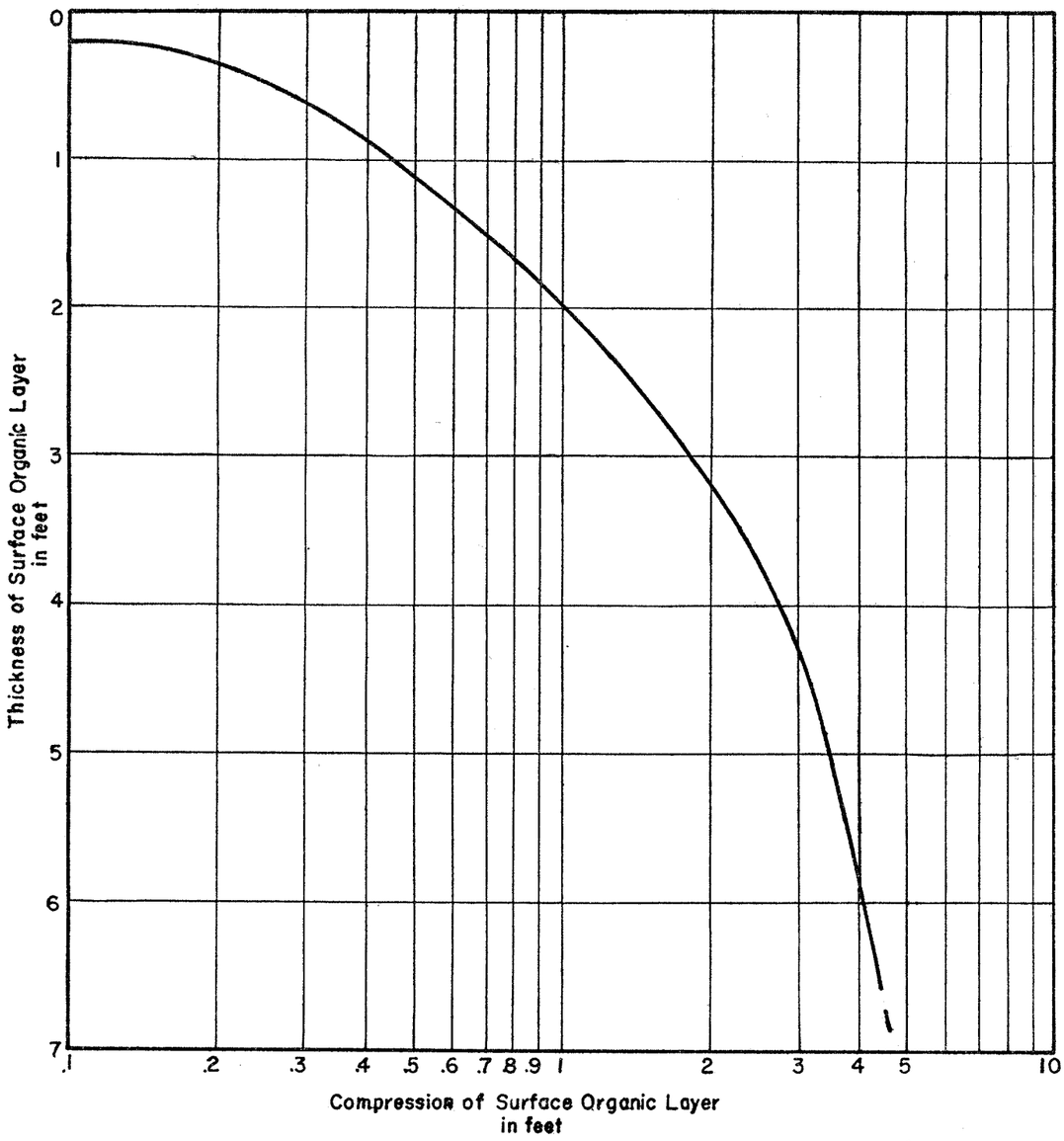

Predicted compression of surface organic layer as related to the layer's initial thickness. Curve constructed from data obtained through measured levee sections.

Rockefeller Refuge Levee Study

Compression of Surface Organic Layer

PLATE XII

841-B